zur Baukarte 00
go to Machine Record 00

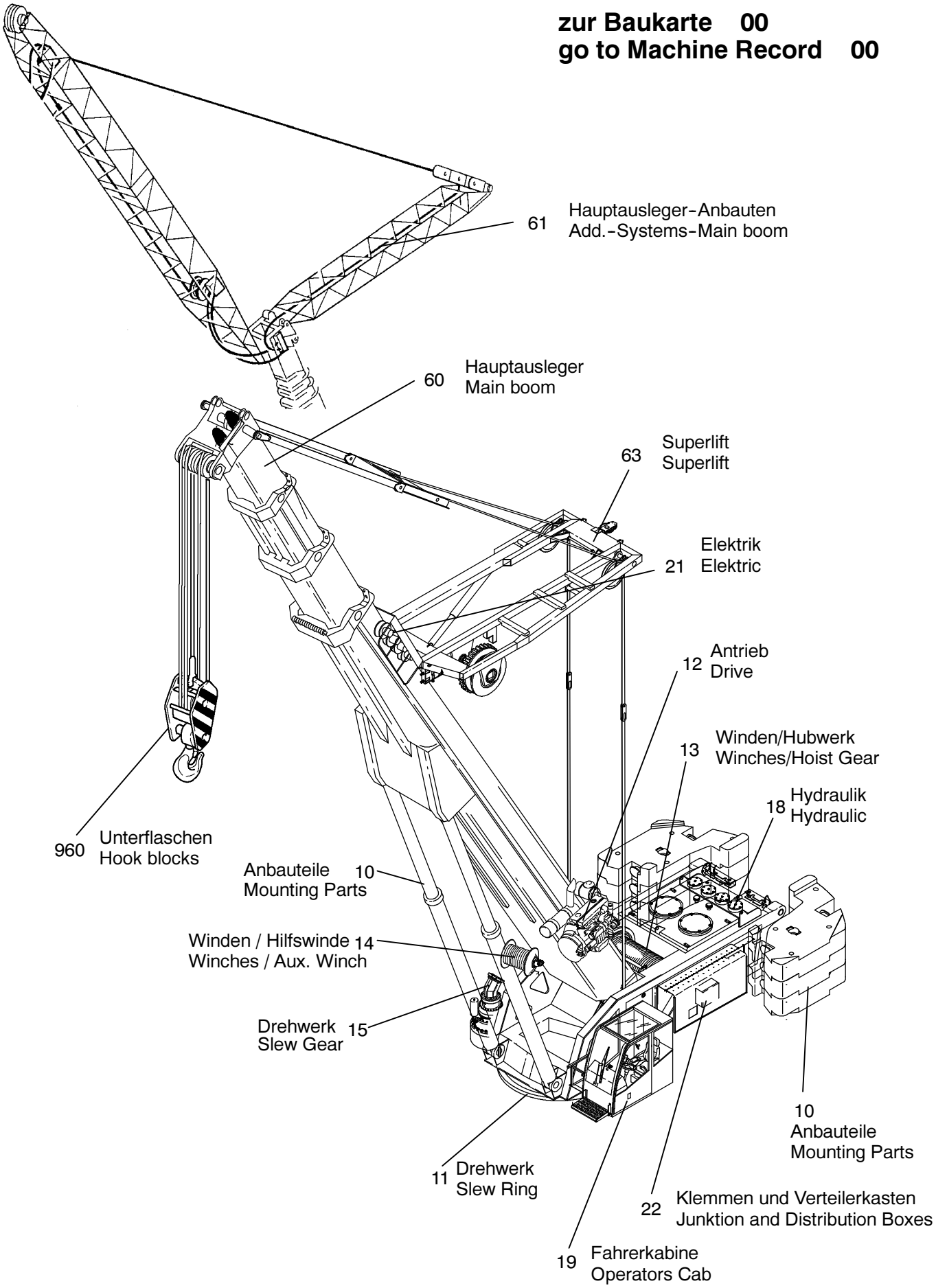

179-0001

12.02.2001