zur Baukarte 00
go to Machine Record 00

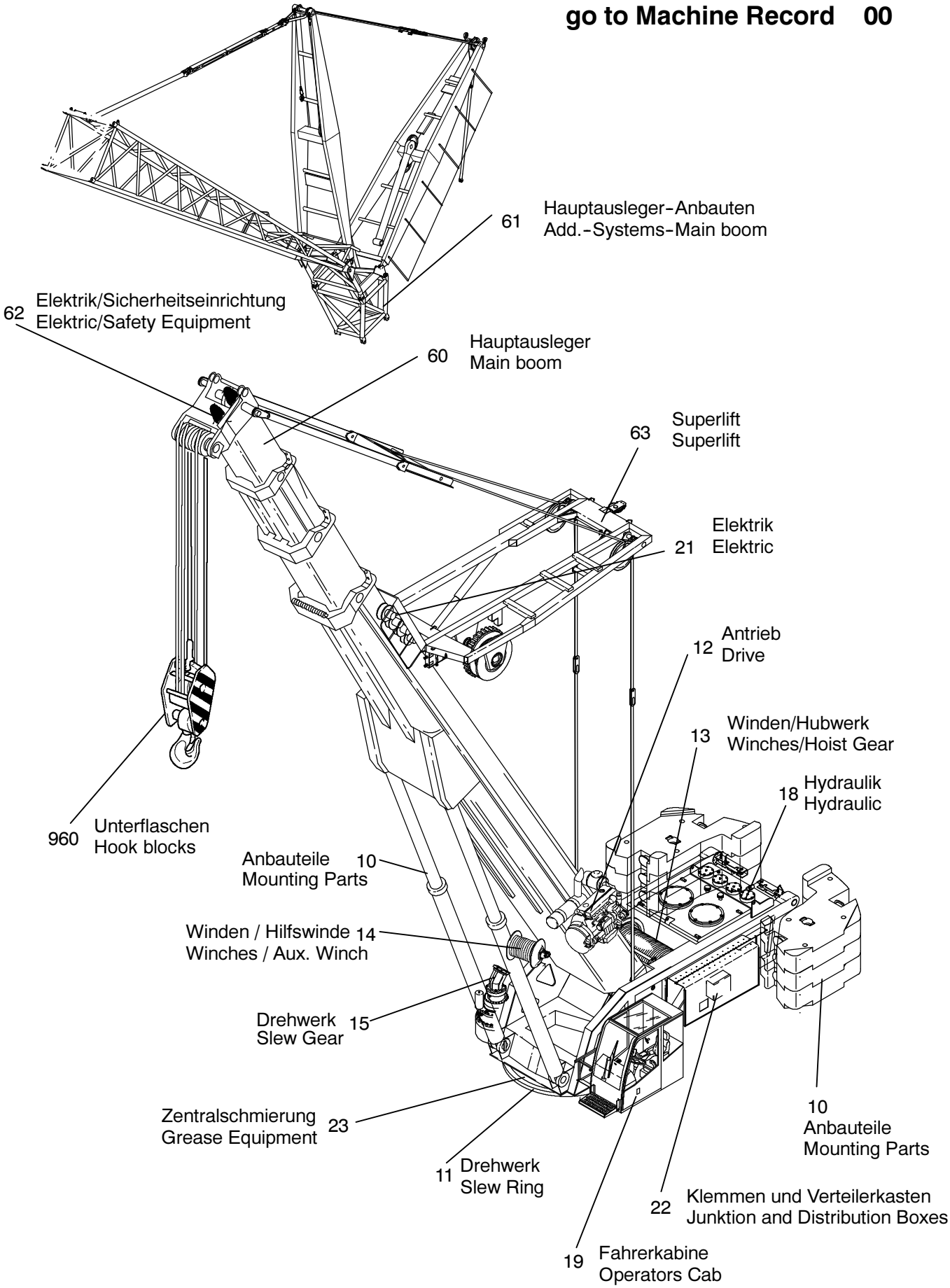

184-0001

23.01.2001