zur Baukarte 00
go to Machine Record 00

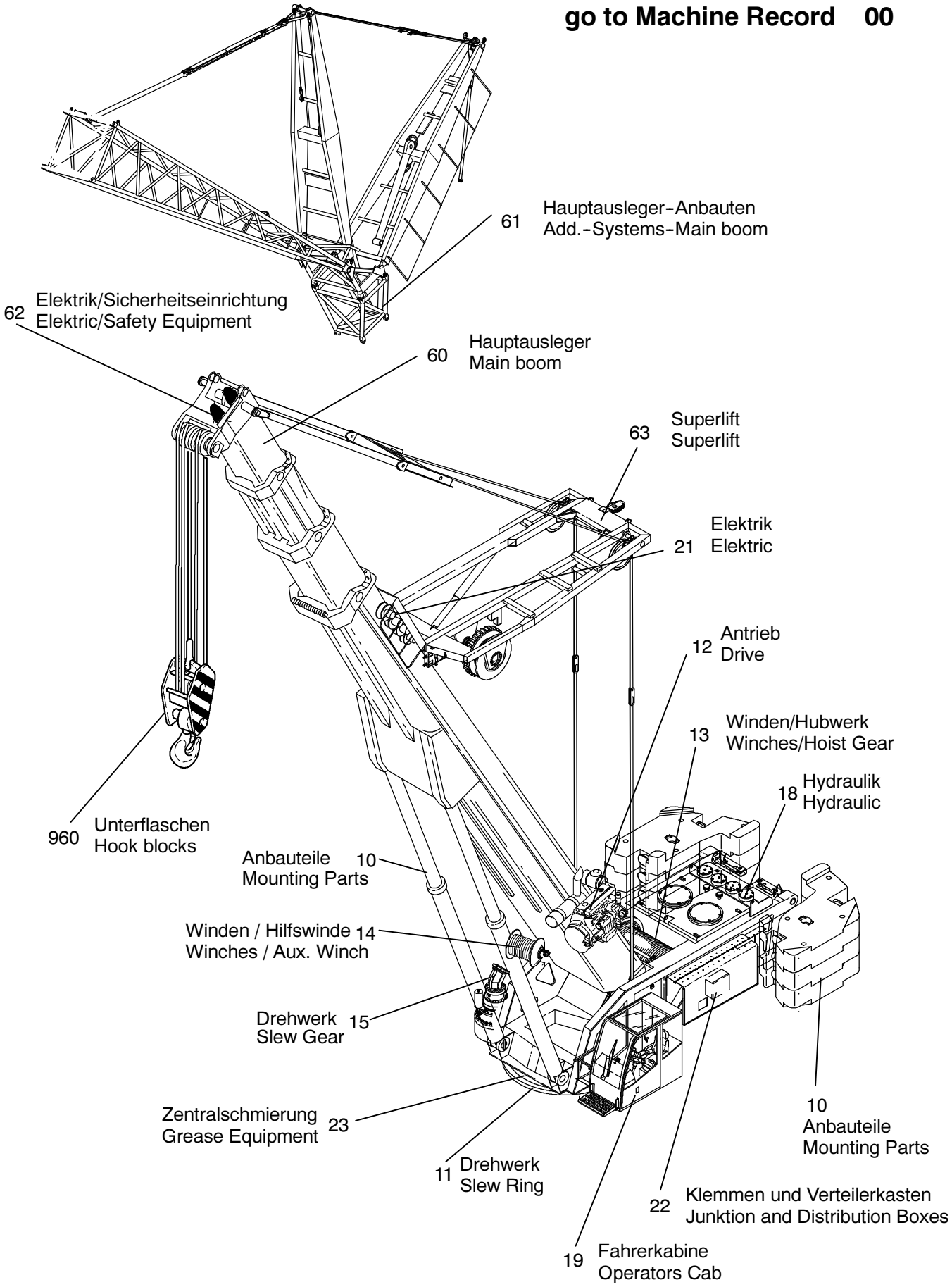

187-0001

17.11.2000